ESR H SERIES - SINGLE PHASE - 3 to 100 kVA

sinalda .com
mains voltage control



QUALITY 2 WITH YEARS STANDARD WARRANTY GUARANTEED

UK CA CE

STATIC DIGITAL VOLTAGE REGULATION

highly efficient with exceptionally ultra fast speed of response - ideal for today's modern needs & those highly sensitive / mission critical loads and applications.

FEATURES

- **Automatic Voltage Regulation**
  Digitally controlled voltage stabilisation
- **Wide Range of Power Ratings**
  Single Phase 3 to 100 kVA
- **Choice of Input Voltage Swing Ranges**
  Input Swing - ±15% (S15), ±20% (S20), ±25% (S25), ±30% (S30), ±35% (S35), ±40% (S40) ±45% (S45), ±50% (S50) *- customer to specify.*
- **Precise Output Voltage Regulation**
  Output Voltage Accuracy ±1% to ±5% - depend on input Swing selected)
- **Transient Voltage Surge Suppression**
  TVSS - Protects loads against harmful high-energy surges, transients and spikes.

STATIC ELECTRONIC DIGITAL DESIGN

AC VOLTAGE STABILISERS & REGULATORS

AC SINGLE PHASE - 3 TO 100 kVA

220V - 230V - 240V - 50 or 60Hz

ESR

2 WIRE

H - SINGLE PHASE

ENSURING AN EXTREMELY STABLE AC MAINS SUPPLY VOLTAGE

Suitable for most types of electrical and electronic equipment, Sinalda's ESR Electronic AC Voltage Stabilisers continuously monitor the incoming supply. Should the incoming voltage rise or drop, the Stabilisers will automatically control the output to ensure the voltage reaching the load equipment always remains constant at the requisite voltage.

Inbuilt spike protection ensures the load is continuously protected against harmful mains born high energy spikes and surges.

Sinalda's ESR Series AC Voltage Stabilisers offer -

- **Ultra Fast Speed of Response**
  Compact in size and quiet in operation, ESR Series AC Voltage Stabilisers deliver an unsurpassable speed of response making them ideal for highly sensitive loads.
- **Static / Solid State Design**
  ESR Series AC Voltage Stabilisers use solid state devices (SCRs) to select transformer taps to regulate the output. Unlike other similar solutions, ESR Stabilisers by nature of their design do not require the SCRs to carry the full load, just a fraction - thereby delivering far superior reliability to similar systems found on the market. With no moving parts (other than cooling fans), they are virtually 'Maintenance Free' solutions.
- **Automatic Electronic Bypass**
  Inbuilt as standard on all models, the automatic bypass maintains power to the load and unit functionality, except regulation, in the event of a problem.
- **All Digital Controls**
  All digital microprocessor control and operation ensures ESR AC Voltage Stabilisers provide the highest level of performance and accuracy. The standard LCD display provides information on the operational status and loading on the stabilizer, and enables the configuration of a number system parameters for more demanding applications where customization is required.
- **Solid State Design**
  Electronic static design with no moving parts (other than cooling fans), delivering a virtually 'Maintenance Free' solution.
- **Over / Low Voltage Protection** Ability to automatically shutdown the Voltage Stabiliser in the event of the input supply voltage going outside pre-set input voltage parameters.
- **SPD Class II Surge Arrestors** Protection against extremely high voltage surges and transients caused by atmospheric (eg. lightning induced strikes) or operational issues on the utility mains supply line.
- **Automatic Bypass Protection** Fully automatic transfer to bypass in the event of a problem.
- **Input & Output Protection with Manual Bypass** Input Breaker, Manual Bypass Switch and internal Output Isolation Switch, including mechanical interlocking to prevent inadvertent mis-operation of the Input & Bypass Breakers.
- **Digital LCD Monitoring Panel & RS485 Interface** Displaying real time operational status, key system readings and alarm events with RS485 Interface ability for remote monitoring.
- **Optional Accessories** Input Isolation, IP54 / NEMA 3 Style Outdoor Enclosures, 150% Overload capability.
- **Compliance with International Standards**
  Designed, manufactured and supplied to comply with leading international standards.
- **CE & UKCA Conformity** Fully compliant and labelled.

© Sinalda UK Limited - Sinalda reserve the right to change any or all the specifications indicated or implied without prior notice. E&EO.

ESR H SERIES - SINGLE PHASE - T1F - 3 to 100 kVA

DIGITAL BUCK BOOST SCR DESIGN TOPOLOGY

Based on the extremely well proven Buck Boost design topology which underlines our SVS AC Voltage Stabilisers, ESR Static Voltage Regulators utilise SCRs (Silicon Controlled Rectifiers) to select transformer taps to deliver a highly stable output voltage with an extremely fast correction time.

Unlike traditional Electronic SCR based solutions, the underlying Buck Boost topology ensures that the SCRs are not required to handle the full load current, but merely a fraction of the load current. Where appropriate, by suitably sizing the ratings of the SCRs, ESR Stabilisers are able to deliver impressive overload capabilities and considerable enhanced reliability.

The utilisation of the latest in microprocessor control and the inclusion as standard on all models of an input circuit breaker, ensures that the SCRs are fully protected against over-current conditions and other malfunctions, which historically have been viewed as the primary weakness of Electronic based SCR solutions.

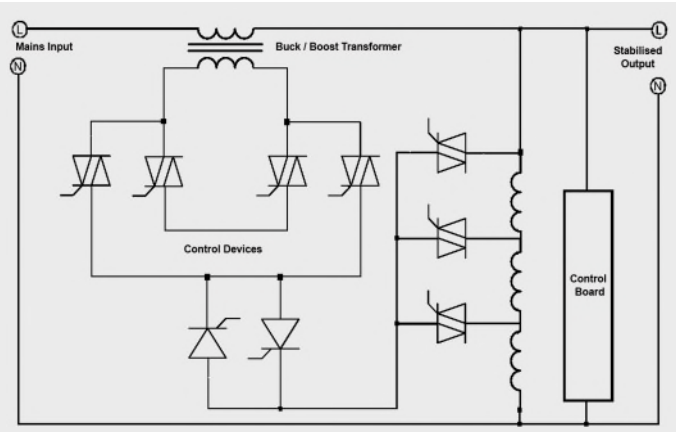

VOLTAGE CHOICES AVAILABLE

2 WIRE SOLUTIONS
SINGLE PHASE (L+N+G/E)

H SERIES
3 to 100 kVA

High Voltage Models:
220V, 230V or 240V
HX Models - 254V, 265V or 277V
Other voltages available on individual request / quotation.

L SERIES
3 to 75 kVA

Low Voltage Models:
110V, 115V, 120V or 127V
Other voltages available on individual request / quotation.

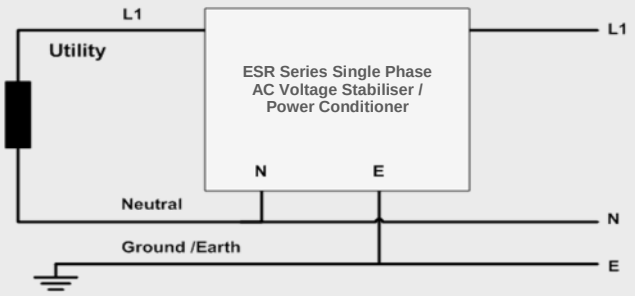

INPUT VOLTAGE WINDOW OPTIONS

H SERIES - ESR-H-S* Input Voltage Windows Options & Output Accuracy

Nominal Single Phase Voltage (L+N+G/E)		INPUT VOLTAGE SWINGS / SWING MODEL NO S* VARIANTS			
		*S15 (±15%)	*S20 (±20%)	*S25 (±25%)	*S30 (±30%)
220V	Input	187 to 253V	176 to 264V	165 to 275V	154 to 286V
	Output	220V ±1%	220V ±1%	220V ±3%	220V ±3%
230V	Input	196 to 265V	184 to 276V	173 to 288V	161 to 299V
	Output	230V ±1%	230V ±1%	230V ±3%	230V ±3%
240V	Input	204 to 276V	192 to 288V	180 to 300V	168 to 312V
	Output	240V ±1%	240V ±1%	240V ±3%	240V ±3%

Nominal Single Phase Voltage (L+N+G/E)		INPUT VOLTAGE SWINGS / SWING MODEL NO S* VARIANTS			
		*S35 (±35%)	*S40 (±40%)	*S45 (±45%)	*S50 (±50%)
220V	Input	143 to 297V	132 to 308V	121 to 319V	110 to 330V
	Output	220V ±3%	220V ±3%	220V ±5%	220V ±5%
230V	Input	150 to 311V	138 to 322V	127 to 333V	115 to 345V
	Output	230V ±3%	230V ±3%	230V ±5%	230V ±5%
240V	Input	156 to 324V	144 to 336V	132 to 348V	120 to 360V
	Output	240V ±3%	240V ±3%	240V ±5%	240V ±5%

© Sinalda UK Limited - Sinalda reserve the right to change any or all the specifications indicated or implied without prior notice. E&EO.

ESR H SERIES - SINGLE PHASE - 3 to 100 kVA

DESIGNED FOR TODAY'S MODERN NEEDS

Voltage Regulators are designed to stabilize the voltage when it fluctuates, up or down.

They are essential whenever reliable power is needed or when normal operation of electrical or electronic equipment is disrupted by voltage variations.

In general when suppliers of today's modern electrical and electronic equipment design their products they do so knowing that most electrical utilities around the world cannot provide or promise better than a ±5% output voltage accuracy of nominal and as such they design their equipment so it is able to operate efficiently within this range.

ESR Stabilisers are specifically designed to meet the requirements of today's modern loads, being feature rich and virtually maintenance free static mains control solutions.

They ensure the availability of a constant voltage at a level that always meets the design requirements of the load equipment, even for the most challenging of power environments or site loads.

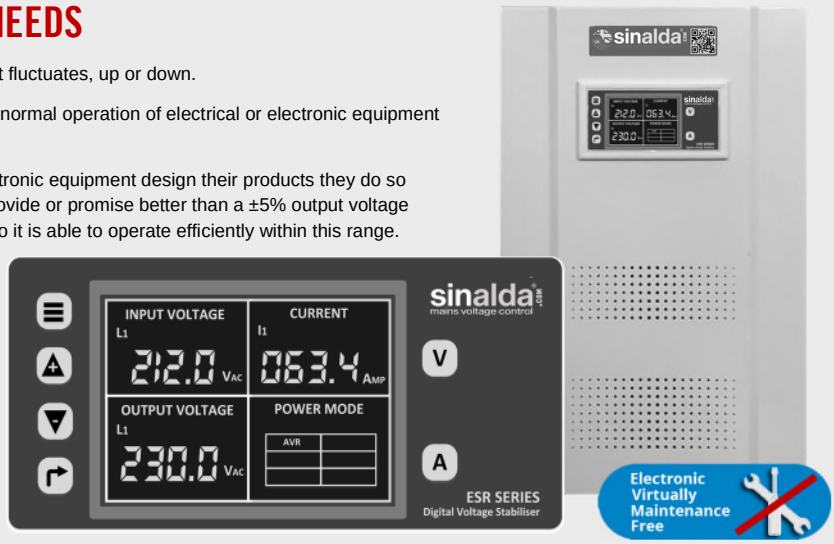

PRODUCT SELECTION TABLE

S* = Selected permissible input voltage window - S15 (±15%), S20 (±20%), S25 (±25%), S30 (±30%), S35 (±35%), S40 (±40%), S45 (±45%) or S50 (±50%)

ESR Models	Rating		Max Rating (Amps per Phase) H SERIES			Dimensions	Weights
	kVA	kW	@ 220V	@ 230V	@ 240V	W x H x D (mm)	Kg
ESR-3H-S*	3	2.4	11	11	10	*Dimensions & Weights are dependent on Swing Model Variant selected (S15 to S50)*	
ESR-5H-S*	5	4	19	18	17		
ESR-8H-S*	8	6.4	30	28	27	*Sizings and Weights available on individual request.*	
ESR-10H-S*	10	8	37	35	34		
ESR-15H-S*	15	12	55	53	50		
ESR-20H-S*	20	16	73	70	67		
ESR-30H-S*	30	24	110	105	100		
ESR-40H-S*	40	32	1846	140	134		
ESR-50H-S*	50	40	182	174	167		
ESR-60H-S*	60	48	219	209	200		
ESR-75H-S*	75	60	273	261	250		
ESR-100H-S*	100	80	364	348	334		



Note: Optional Accessories added may affect dimensions - subject to confirmation.

TYPICAL APPLICATIONS

- Computers & Network Systems
- Medical Equipment
- Electronics Equipment
- Testing Equipment
- Laboratory Equipment
- POS Terminals
- Process Control Systems
- TV / Radio Broadcasting Stations
- Elevators
- Audio/Video Systems
- Security Systems
- Production Line
- CNC Equipment
- SMT Equipment

© Sinalda UK Limited - Sinalda reserve the right to change any or all the specifications indicated or implied without prior notice. E&EO.

ESR H SERIES - SINGLE PHASE - 3 to 100 kVA

TECHNICAL SPECIFICATION

Technology:	Digital Buck Boost SCR design topology
Input Voltage Swing Variant Options Available: (S*)	**Single Phase, 2 Wire (1 Phase + Neutral + G/E).** Other swing options available to special quotation / order.
Output Voltage:	**220V, 230V & 240V** (*Customer to specify*), Single Phase, 2 Wire. **HX Models** - 254V, 265V & 277V - available on request. The permissible input voltage swing is relative to the preset output voltage.
Output Voltage Accuracy:	**± 1 to 5%** - *dependent on input swing - see above).*
Frequency:	47 - 63Hz
Correction Time:	Within 60 milliseconds (3 to 4 Cycles) per Step
Efficiency:	≥95%
Power Factor:	0.8 pf
Maximum Output Current Rating:	Up to 100% (set via Digital Display Panel)
Surge Suppression:	**TVSS** - Protects loads against high-energy Spikes and Transient Voltages.
Harmonic Distortion:	None introduced
Automatic Bypass:	Automatic transfer to bypass in the event of an overload or system problem.
Start Up Protection:	Protection of the load equipment from damaging start up voltage surges.
Optional Features:	AquaStop Protective PCB Coating (*-AS*) - protection against damp and moisture Ingress Isolation Transformer (*-PC*) - extra protection between the utility supply and the load. Ensures protection against common and transverse mode electrical noise, as well as enhanced TVSS protection - commonly referred to as a 'Clean' supply (*AKA Power Conditioner*) Outdoor IP54 Enclosure (*-IP54*) - IP54 /NEMA 3 Style Enclosure for outdoor or more challenging internal environments] 150% Surge Rating for up to 1 minute (*-SR50*) - Recommended for inductive load types
Environment:	Temperature range 0 to 45 °C. Derate by 2% for each additional °C Up to max 60 °C . Suitable for indoor tropical use 90% RH (non-condensing). Maximum altitude 4000m. Derate by 2.5% for each additional 500m.
Audible Noise:	45 to 65 dB - dependent on model selected & ambient background noise level.
Construction:	Enclosures to IP20 (NEMA 1 Style) - BS EN 60529 (Option - Outdoor IP54 / NEMA 3)
Paint Colour:	RAL 7032 (Pebble Grey - Epoxy Powder Coating)
EMC Conformance:	Complies with BS EN 55022 and the relevant parts of the BS EN 61000 series of standards.
CE Conformity:	**CE Marked** - being fully compliant with European Union Directives 2014/30/EU (The EMC Directive) and 2014/35/EU (The Low Voltage Directive) and associated UK Regulations
Standard Warranty:	Two Years / 24 Months - with extendable option to 5 years
Standard Features:	Input Breaker, Manual Bypass Switch and internal Output Isolation Switch. Along with LCD Digital Display, RS-485 interface, SPD Class II Surge Protection & Over / Under Voltage Protection.

Model	Input Swing	Output Accuracy Default	Output Accuracy Adjustable
S15	± 15%	± 1%	±1% to ±5%
S20	± 20%	± 1%	±1% to ±5%
S25	± 25%	± 3%	±3% to ±5%
S30	± 30%	± 3%	±3% to ±5%
S35	± 35%	± 5%	±3% to ±5%
S40	± 40%	± 5%	±3% to ±5%
S45	± 45%	± 5%	±5% to ±10%
S50	± 50%	± 5%	±5% to ±10%

INDUCTIVE LOADS

Where the load type is **inductive** in nature such as motors (fans, pumps, etc), solenoids, and relays it is essential that high inrush current and short-time overload factors are fully considered. With motors (without a soft start facility) typically drawing on start-up current 5 to 7 times the stated rating of the motor it is recommended that a Static Voltage Stabiliser is selected that is 3 times the stated rated capacity of the load and that the inrush current does not exceed the listed "**Maximum Output Current Rating**" of the stabiliser [*or stabiliser with the SR50 option, if fitted*].

SOLID & ROBUST CONSTRUCTION

ESR Series Stabilisers are enclosed in robust floor standing air-cooled cubicles, being built upon a rigid framework construction and offering removable side panels and for ease of installation and servicing.

Supplied as standard with bottom cable entry (*top entry to specific order*), ESR Stabilisers offer IP20 / NEMA 3 Style Ingress Protection and are supplied complete with an epoxy powder heavy duty Oyster White (RAL 1013) orange peel paint finish.



Typical Internal View

ALSO AVAILABLE IN IP54 / NEMA 3 STYLE ENCLOSURES



Suitable for external use, or more challenging internal environments.

LCD DIGITAL DISPLAY PANEL

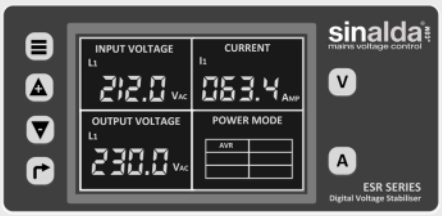

Comprehensive LCD Digital Monitoring and Control Panel

delivering intuitive control and monitoring of all the key system parameters.

Real Time Display of -

- **Voltage:** Input & Output Voltages
- **Current:** Output Current
- **Operational Status:** On AVR & On Bypass
- **Alarm Conditions:** Overload, Over-Voltage, Under-Voltage & Fuse Failure

Modifiable System Parameter Settings -

- Output Voltage
- Output Voltage Accuracy
- Correction Time
- Voltage Regulation Method
- Over - Voltage
- Under - Voltage
- Over - Current Value

RS-485 COMMUNICATION

All ESR Voltage Stabilisers offer as standard a RS485 communication facility which will enable the following information to be available for remote monitoring -

Measurements:

- **Input Voltage:** Phase to Neutral
- **Output Voltage:** Phase to Neutral
- **Current:** Output Load Current

Status Indications:

- Over Voltage
- Under Voltage
- Current Overload
- SCR Fuse Blown

© Sinalda UK Limited - Sinalda reserve the right to change any or all the specifications indicated or implied without prior notice. E&EO.

ESR H SERIES - SINGLE PHASE - 3 to 100 kVA

STANDARD ENCLOSURE TYPES

ALSO available in Outdoor IP54 / NEMA 3 Style Enclosures - IP54 OPTION

B01 to B02 Enclosures

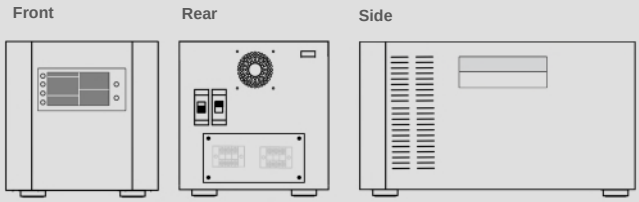

Physical Size:		Rear / Bottom Cable Entry
B01	280(W) x 300(H) x 530(D) mm	11.1"(W) x 11.9"(H) x 20.9"(D) inches
B02	350(W) x 400(H) x 600(D) mm	13.8"(W) x 15.8"(H) x 23.7"(D) inches

B03 to B05 Enclosures

1 Side Door
with removeable side panel

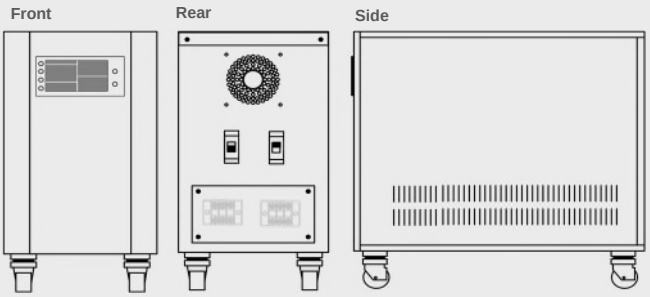

Physical Size:		Rear Bottom Cable Entry
B03	380(W) x 750(H) x 780(D) mm	15.0"(W) x 29.6"(H) x 30.8"(D) inches
B04	430(W) x 1050(H) x 780(D) mm	17.0"(W) x 41.4"(H) x 30.8"(D) inches
B05	520(W) x 1140(H) x 870(D) mm	20.5"(W) x 44.9"(H) x 34.3"(D) inches

ESR TYPICAL APPLICATIONS

- Computers & Network Systems
- Medical Equipment
- Electronics Equipment
- Testing Equipment
- Laboratory Equipment
- Process Control Systems
- TV/Radio Broadcasting Stations
- Elevators / Lifts
- Audio/Video Systems
- Production Lines
- CNC Machines
- SMT Equipment

Every Voltage Stabilization or Power Conditioning solution we offer is backed by the unrivalled experience we have gained in the world market over the last 30 years or so.

Tried, tested and extensively proven in all corners of the world, including some of the harshest and most remote power environments on this planet, our solutions can be found on duty protecting vital equipment where the supply must never be found wanting . . . not even for a single second.

Only by delivering Quality in product and service have we been able to consistently grow our client base year on year. Today we are an approved supplier to many well-known major international corporations and public organisations.

With an emphasis always on building and maintaining strategic and long-lasting relationships with our Customers, our Clients are drawn from a wide selection of industries and market sectors spread throughout the world.

APPLICATIONS IN . . .

- Africa
- Europe
- Middle East
- North America
- Central & South America
- Caribbean
- Asia
- Oceania

Want to learn more about us and the Clients we serve?
Check us out online at https://www.sinalda.com/sinalda/at-your-service/

CUSTOM BUILT SOLUTIONS

Sinalda UK, with a strong and wide manufacturing base, is able to meet the requirements of customers from our own in-house professional resources.

Where bespoke / custom built solutions are required we are able to call upon our extensive portfolio of proven standard designs and tailor offerings to accommodate, without breaking the bank, most individual specific requirements.

ESR SERIES

ESR SERIES
AC Voltage Stabilisers and Power Line Conditioners are available from -



© Sinalda UK Limited - Sinalda reserve the right to change any or all the specifications indicated or implied without prior notice. E&EO.