PWM
H SERIES

sinalda®.COM
mains voltage control

Single Phase Static Digital AC Voltage Stabilisers / Regulators



TYPICAL APPLICATIONS



STATIC IGBT PWM DIGITAL DESIGN

- Automatic Voltage Regulation
- Spike & Surge Protection
- Fast Response Time
- Solid State Design
- Virtually Maintenance Free

2.1 kVA to 14 kVA

SINGLE PHASE - 2 WIRE
50 / 60Hz

H Models

230V

QUALITY 2 WITH UP TO 2 YEARS STANDARD WARRANTY GUARANTEED

CE UKCA

© Sinalda UK Limited - Sinalda reserve the right to change any or all the specifications indicated or implied without prior notice. E&EO.

PWM SERIES

COST-EFFICIENT VOLTAGE STABILISATION

PWM SERIES microprocessor controlled Single Phase Static Digital Voltage Stabilisers automatically correct brownouts (by boosting low voltage) and over-voltages (by reducing high voltage). They are designed to ensure the delivery of a stable and quality output voltage.

Being designed for many years of reliable service, **Sinalda**'s ***PWM*** models also provide protection from incoming line voltage sags, spikes and surges / swells.

With no moving parts (other than cooling fans), they are virtually maintenance free and offer an exceptional fast speed of correction, making them ideal for the most sensitive of electrical and electronic loads.



Digital Front Panel Display

Internal View

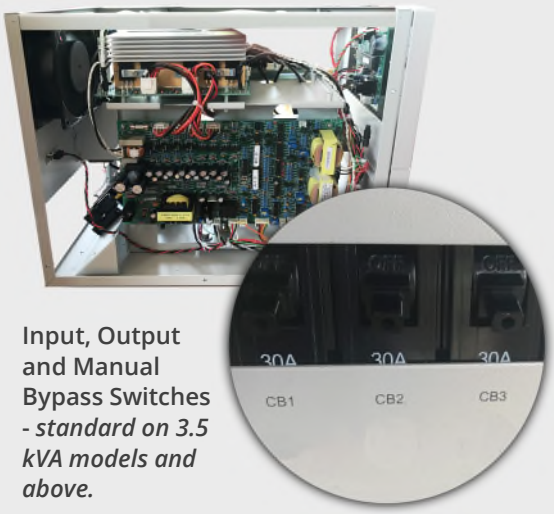

Input, Output and Manual Bypass Switches - *standard on 3.5 kVA models and above.*

AN ENHANCED LEVEL OF POWER PROTECTION

Capable of supporting all electrical and electronic load types, including modern office and general household appliances, ***PWM Series*** Voltage Stabilisers are designed to deliver a regulated and highly accurate output voltage for power environments where the incoming utility mains supply can drop as low as 173V or rise as high as 287V.

Representing the latest in digital static design, ***PWM Series*** Stabilisers are highly reliable and include as standard many protection features such as Input, Output, and Manual Bypass Breakers, as well as an automatic bypass facility, which similar systems available in the market only deem fit to offer as expensive add-ons.

PRINCIPLE OF OPERATION

PWM SERIES AC Voltage Stabilisers are designed around a traditional well proven 'Buck / Boost' design topology, utilising the latest in IGBT Power Devices and digital PWM (Pulse Width Modulated) controls.

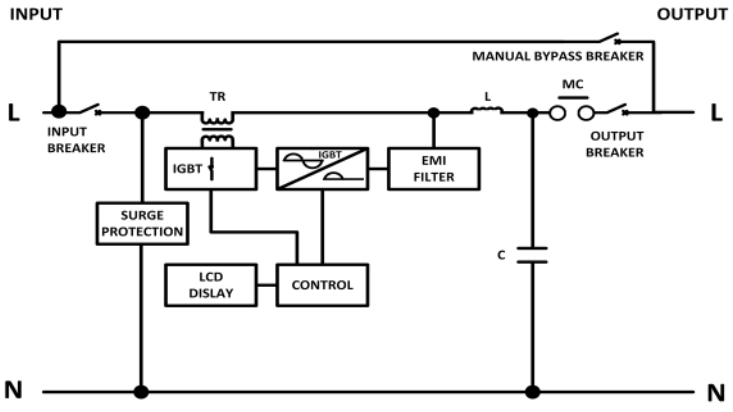

© Sinalda UK Limited - Sinalda reserve the right to change any or all the specifications indicated or implied without prior notice. E&EO.

PWM SERIES

GENERAL TECHNICAL SPECIFICATION

H SERIES - Single Phase 2 Wire 50/60 Hz

VSi Model:	PWM-2.1H-S25	PWM-3.5H-S25	PWM-5.25H-S25	PWM-7H-S25	PWM-10.5H-S25	PWM-14H-S25
GENERAL:						
Max. Power Ratings: kVA / kW	2.1 kVA/kW	3.5 kVA/kW	5.25 kVA/kW	7 kVA/kW	10.5 kVA/kW	14 kVA/kW
Amps @ 230V	9.1 Amps	15.2 Amps	22.8 Amps	30.4 Amps	45.6 Amps	60.8 Amps
Design Topology:	IGBT & MOSFET / Pulse Width Modulated (PWM) Inverter / Rectifier Solid State Design					
INPUT:						
Voltage & Frequency:	230V ±25% (173 to 287V), 2 Wire, 50/60 Hz (L+N+G/E) *					
Max. Input Current: Amps @ 173V	13 Amps	21 Amps	32 Amps	42 Amps	63 Amps	84 Amps
Input Power Connections:	IEC-320 (16 Amp)	Hardwire				
OUTPUT:						
Voltage & Frequency:	230V ±1%, 2 Wire, 50 Hz (L+N+G/E) *					
Wave Form:	Pure Sine Wave					
Efficiency:	≥ 95%					
Harmonic Distortion:	<3% of THD for Linear Load					
Power Factor:	The Power Factor has no effect on performance providing the device is being used within its rated capacity					
Output Power Connections	2 x IEC-320 (10 Amp)	Hardwire				

* = 220V or 240V Models available to Special Order

METERING, STATUS INDICATORS, ALARMS & COMS:	
LCD Digital Metering: Voltage (Volts)	Input & Output (V)
Frequency (Hz)	Input & Output (Hz)
Loading (Amps)	Output Current (Amps) & Load Level (%)
Temperature (°C)	Internal Temperature (°C)
Status Indicators: Line	Normal Operation Available
Inv	Stable Output Voltage
Bypass	Overload or Fault - In Automatic Electronic Bypass Mode
Fault	Overload or the existence of an abnormal condition
Audible Alarms:	Fault and Over Voltage
Communication:	RS-232 Serial Port
PROTECTION FEATURES:	
Over Current:	Input & Output Breakers - as Standard
Spike & Surge Protection:	MOV (Metal Oxide Varistor)
Noise Protection:	EMI Filters
Overload Protection:	More than 105% Output Automatically Disconnected - requiring Manual Restart (Output Under Limit 188V ±4V, Over Limit 270V ±4V)
Over & Under Voltage Protection:	Protection against high and low voltage with automatic output disconnection requiring manual restart
Short Circuit Protection:	Automatic output disconnect requiring manual restart
Manual Maintenance Bypass - inbuilt:	No / Yes - Ability to manually re-route the supply feed to bypass the stabilisation function
ENVIRONMENTAL:	
Operating Temperature Range:	0 to 40°C. Derate by 2% for each additional °C Up to max 60 °C .
Storage Temperature Range:	-20 to 50°C
Maximum Altitude:	2000 Metres. Derate by 1% for each additional 100m.
Relative Humidity:	Suitable for indoor use up to 90% Relative Humidity (non-condensing)
Cooling:	Forced fan cooling
Acoustic Noise Level: @ 1 Metre	<50 dBA

	PWM-2.1H-S25	PWM-3.5H-S25	PWM-5.25H-S25	PWM-7H-S25	PWM-10.5H-S25	PWM-14H-S25
PHYSICAL:						
Construction:	Sheet metal enclosure to IP20 / NEMA 1 Style - BS EN 60529 - with Plastic Molded Front Cover					
Colour:	RAL 7047 (Telegray 4)					
Dimensions: - W x H x D (mm)	258 x 333 x 422	258 x 333 x 422	258 x 333 x 422	258 x 333 x 422	258 x 546 x 531	258 x 546 x 531
Packed - W x H x D (cm)	39 x 45 x 54	39 x 45 x 54	39 x 45 x 54	39 x 45 x 54	41 x 78 x 68	41 x 78 x 68
Weight: (Packed)	23 Kg (26 kg)	29 Kg (32 kg)	30 Kg (33 kg)	32 Kg (35 kg)	58 Kg (69 kg)	62 Kg (73 kg)

CERTIFICATION & CONFORMANCE:	
EMC Conformance:	BS EN 55022 and relevant parts of BS EN 61000
CE Certification:	Fully Compliant - 2014/30/EU (The EMC Directive) and 2014/35/EU (The Low Voltage Directive)
WARRANTY:	
Standard Warranty:	24 Months / 2 Years from date of Supply

© Sinalda UK Limited - Sinalda reserve the right to change any or all the specifications indicated or implied without prior notice. E&EO.

PWM SERIES

FRONT DIGITAL DISPLAY PANEL

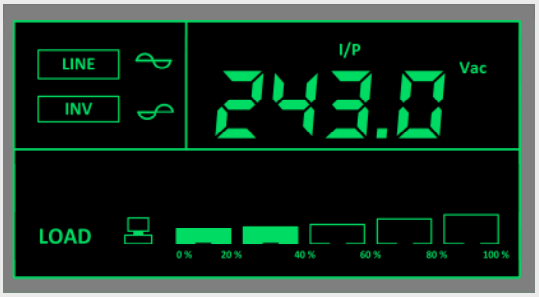

LED DIGITAL METERING	
Input Voltage (I/P Vac)	Voltage kevel of the incoming utility mains supply
Output Voltage (O/P Vac)	Output voltage delivered by the system
Input Frequency (I/P Hz)	Frequency of the incoming utility mains supply
Output Frequency (O/P Hz)	Output Frequency delivered by the system
Load Current (O/P)	Power (Amps) drawn by the connected load
Temperature (°c).	Internal Temperature of the system
Load Level (%).	Bar Graph showing percentage load Level

LED STATUS INDICATION	
LINE	All Okay - in line mode
BYPASS	In Bypass Mode
INV	Stable Output Voltage
FAULT	Output Overload or an Abnormal Condition exists

AUDIBLE ALARMS
Fault
Over Voltage

COMMUNICATIONS
RS-232 Serial Port - Standard on ALL Models

FRONT & REAR VIEWS

FRONT & REAR VIEWS - 2.1 to 7kVA Models

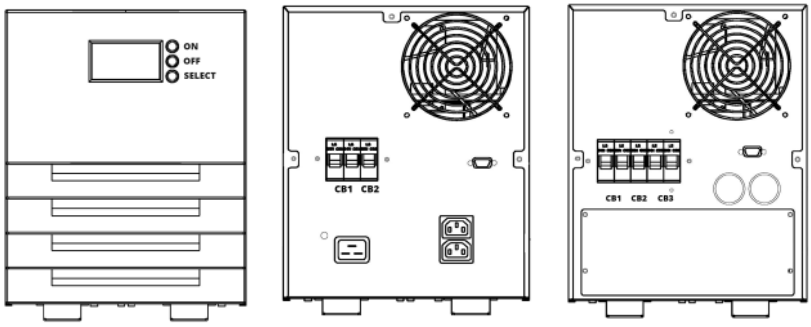

Front View | Rear View (2.1kVA) | Rear View (3.5 to 7kVA)

FRONT & REAR VIEWS - 10.5 to 14kVA Models

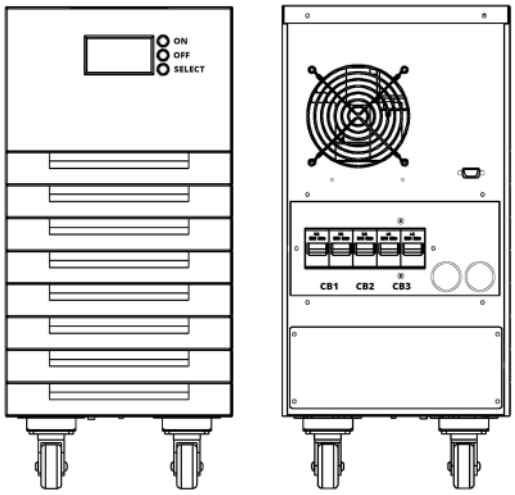

Front View | Rear View

INPUT & OUTPUT CONNECTIONS

Plug N Play (2.1kVA Model)

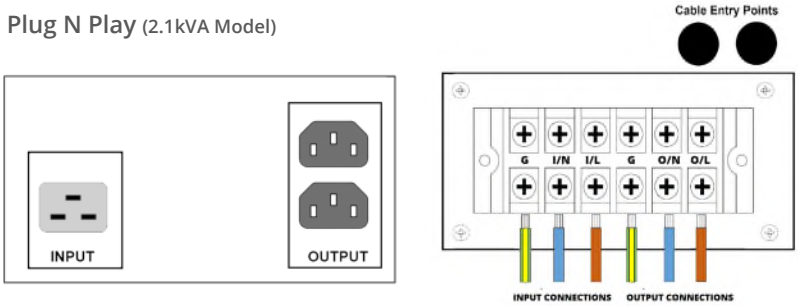

Hardwire (3.5 kVA Model & above)

sinalda.com
mains voltage control

Please Note: PWM Voltage Stabilisers are **NOT FOR USE** with life sustaining equipment, or any device where the power requirements exceed the "Maximum Power Ratings" listed in the General Technical Specification table.

These Stabilisers are not designed to support / protect voltage "back feed" applications, where energy is required to be also fed back into the utility supply.

© Sinalda UK Limited - Sinalda reserve the right to change any or all the specifications indicated or implied without prior notice. E&EO.